NEW!

COMPACT STEAM OVEN

Healthy, tasty cooking for the family

FV-ST51 GL
STEAM OVEN

Do you want to cook as a real professional chef? Steam cooking is the trick.

Combine steam and hot air simultaneously and your favourite recipes will keep all the natural juiciness and succulence of the food inside, with a crispy crust outside.

Just the way you like it.

INSTALLATION

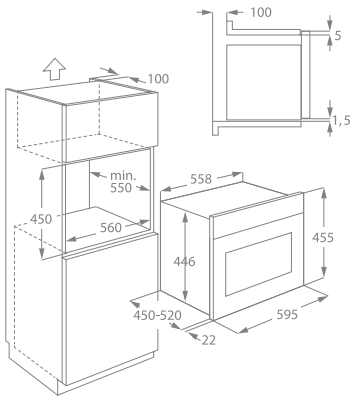

** Drawings for illustrative purposes only.*

KEY BENEFITS

- Keep All Natural Vitamins & Minerals
- Uses Less Oil For Cooking
- Perfect Finish, Enhanced Flavours
- Cooks 20% Faster
- Easy To Use
- Child Safety Lock

FEATURES

- Compact 45 cm steam oven
- Digital touch controls
- 35 lt oven capacity
- Tangential cooling fan
- 1,4 lt Water tank
- Side racks (4 levels)
- Stainless steel oven cavity
- Warm Drawer accessory
- Electronic timer 0 to 90' with sound signal
- Defrosting by weight/time
- 25 Preset functions: Steam, Regeneration, cooking vegetable, Fish, Meat, side dishes with 5 auto recipes each
- Adjustable temperature from 40°C to 100°C
- Drop down door

FUJIOH
Leading Kitchen Evolution

Fujioh International Trading Pte Ltd
130 Joo Seng Road #05-05
Singapore 368357

+65 6286 3286
www.fujioh.sg | fit@fujioh.com.sg
Fujioh Global

NEW!

FUJIOH'S LATEST OVEN SERIES

Beautiful, intelligent cooking

FV-EL53 GL
OVEN

FEATURES

- Multifunction oven
- Full electronic touch controls
- Preset temperature for each functions
- 64 lt oven capacity
- Tangential cooling fan
- Smooth sides with chromed racks
- 2 shelves position with telescopic rails
- Safety & cold touch - triple glazed door with Thermo-reflecting glass
- Titanium enamelled cavity
- Temperature setting from 50°C to 260°C

INSTALLATION

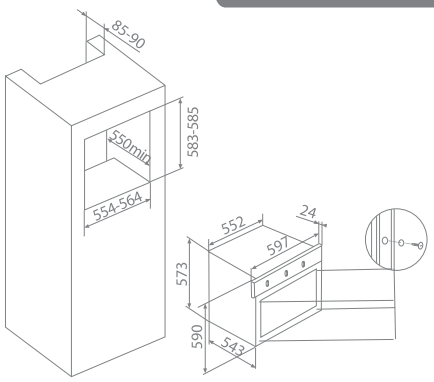

FV-EL52 GL
OVEN

FEATURES

- Multifunction oven
- Electronic touch programmer
- Pop-out metal knobs
- 64 lt oven capacity
- Tangential cooling fan
- Smooth sides with chromed racks
- 1 shelf position with telescopic rails
- Safety & cold touch - triple glazed door with Thermo-reflecting glass
- Titanium enamelled cavity
- Temperature setting from 0°C to 250°C

INSTALLATION

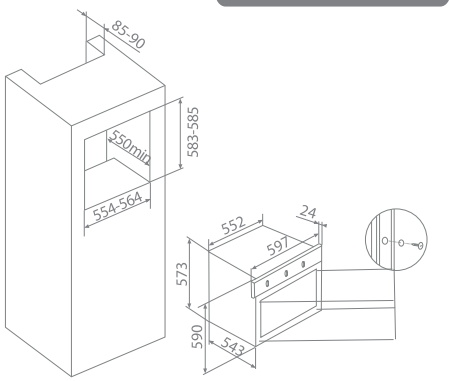

FV-EL51 GL
OVEN

FEATURES

- Multifunction oven
- Timer 120' end of cooking
- 60 lt oven capacity
- Tangential cooling fan
- Moulded rack support
- Safety & cold touch - double glazed door with Thermo-reflecting glass
- Titanium enamelled cavity
- Temperature setting from 0°C to 250°C

INSTALLATION

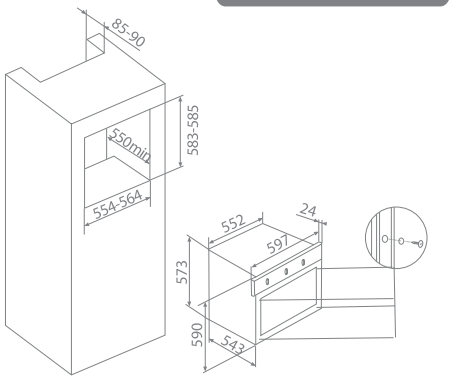

** Drawings for illustrative purposes only.*

FUJIOH
Leading Kitchen Evolution

Fujioh International Trading Pte Ltd
130 Joo Seng Road #05-05
Singapore 368357

+65 6286 3286
www.fujioh.sg | fit@fujioh.com.sg
Fujioh Global